NOTES & SPECIFICATIONS:

1. CONCRETE SHALL BE MIXED, PLACED AND CURED IN ACCORDANCE WITH CSA A 23.1–04.
2. MATERIALS:
   –CEMENT SHALL BE IN ACCORDANCE WITH CSA 23.1–94 TYPE GU CEMENT
   –CONCRETE SHALL HAVE A MINIMUM 28 DAY COMPRESSIVE STRENGTH OF 30MPa, NATURAL
   –AIR CONCRETE AND A MAXIMUM W/C RATIO OF 0.45.
3. REINFORCING STEEL CLEAR COVER = 1½"
4. ALL REINFORCING STEEL HOOKS TO BE STANDARD HOOK LENGTH U.N.O.

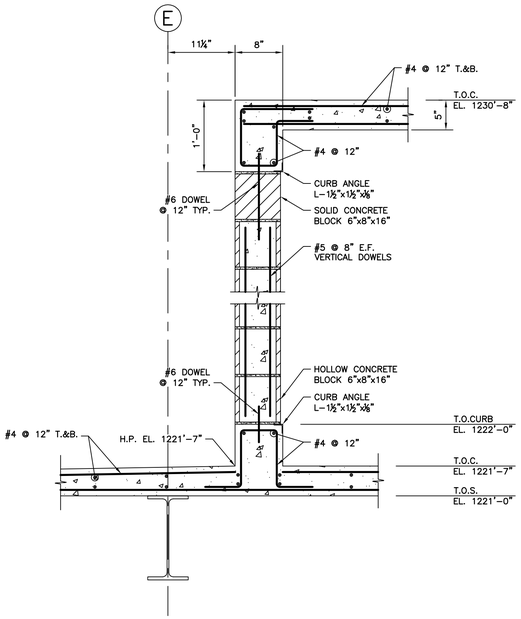

SECTION A/102
SCALE: 1" = 1'–0"

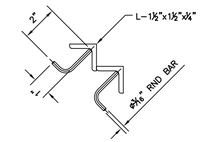

DETAIL 2
SCALE: 3" = 1'–0"

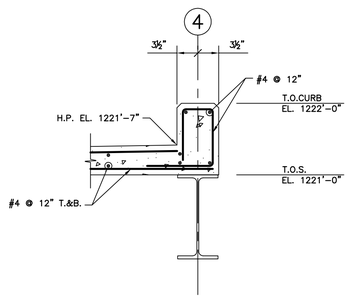

SECTION B/102
SCALE: 1" = 1'–0"

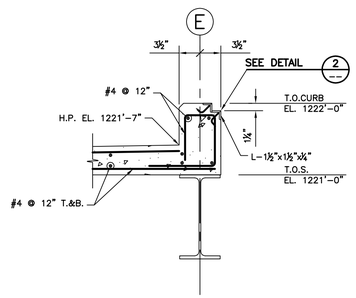

SECTION C/102
SCALE: 1" = 1'–0"

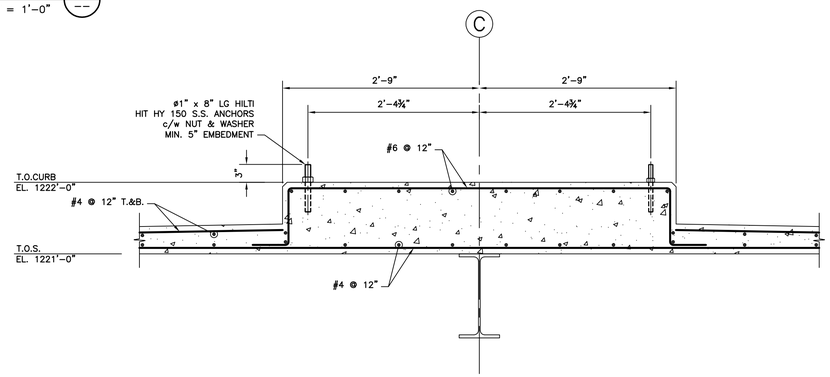

SECTION D/102
SCALE: 1" = 1'–0"

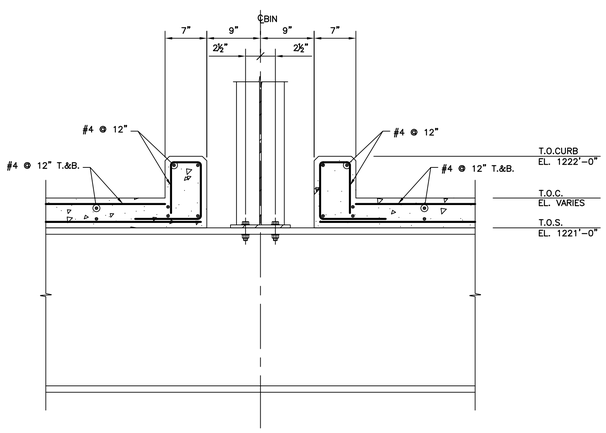

SECTION E/102
SCALE: 1" = 1'–0"

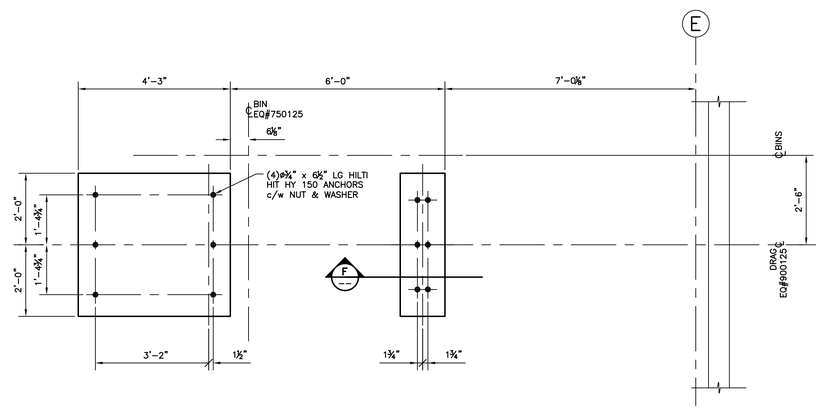

DETAIL 1/102
SCALE: 1/2" = 1'–0"

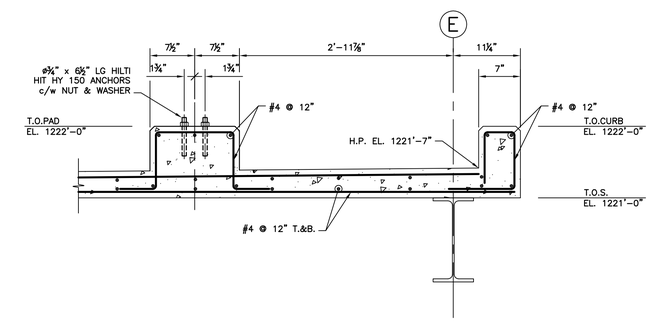

SECTION F/--
SCALE: 1" = 1'–0"

REVISIONS									
NO.	DESCRIPTION	BY	CHK	DATE	NO.	DESCRIPTION	BY	CHK	DATE

REVISIONS									
NO.	DESCRIPTION	BY	CHK	DATE	NO.	DESCRIPTION	BY	CHK	DATE
					0	ISSUED FOR APPROVAL	WHG	BDT	03–MAR–14

STAMP

KENLIN DESIGN GROUP

DWN. BY WHG	DATE 03–FEB–2014
DESIGN BY EDC	DATE 03–FEB–2014
CHK'D. BY BDT	DATE 03–MAR–2014

PROJECT

TITLE
CONCRETE – DETAILS
@ T.O.C. EL. 1221'–5"
BETWEEN GRIDLINE 'A TO F' AND '1 TO 5'

SCALE 1"=1'–0" | JOB No. 125–02 | DWG. No. 230125–112 | REV. 0

3/4/2014 3:04:10 PM